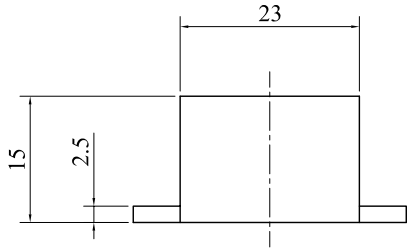

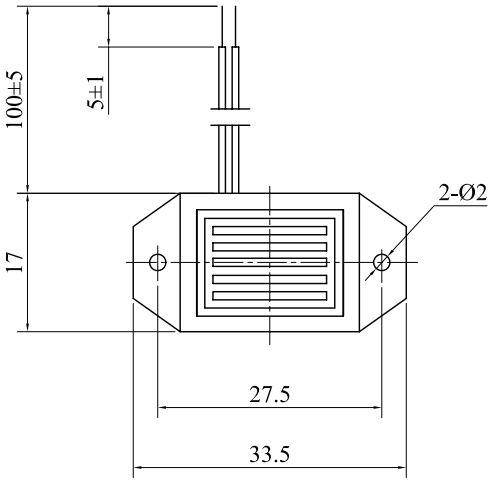

SPECIFICATION

1.Rated Voltage 12VDC
2.Operating Voltage .....9~15VDC
3.Max.Rated Current .....30mA at 12VDC
4.Resonant Frequency .....400±100Hz
5.Min.Sound Pressure Level.....80dB at 12VDC/20cm
6.Case Material .....ABS
7.Operating Temperature .....-20~+60℃
8.Store Temperature .....-30~+70℃
9.Weight 8g

No.	DESCRIPTION	APPROVED	DATE

TOLERANCES UNLESS NOTED OTHERWISE
.X ±
.XX ±
.XXX ±
90° FORMED ANGLES +2° -1°
FIRST ANGLE PROJECTION

APPROVALS	DATE
DRAWN	
CHECKED	
APPROVED	03.01.15

Magnetic Buzzer
CFGM12

UNIT	DWG NO.		
mm	840.638		
SCALE		SHEET	VER 1.0