# CFU1001 SERIES

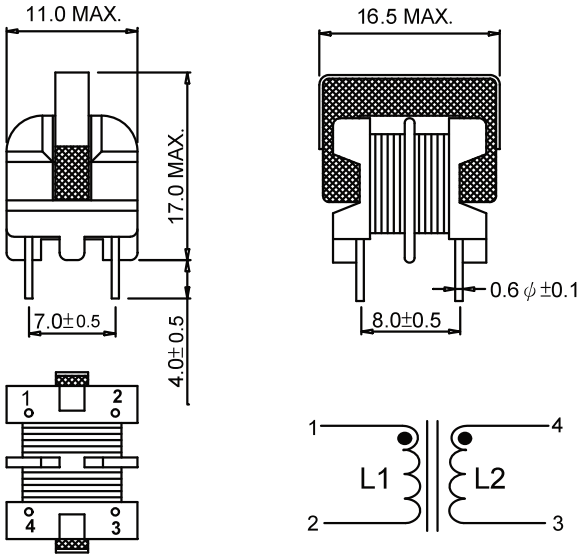


**CFU1001V SERIES**

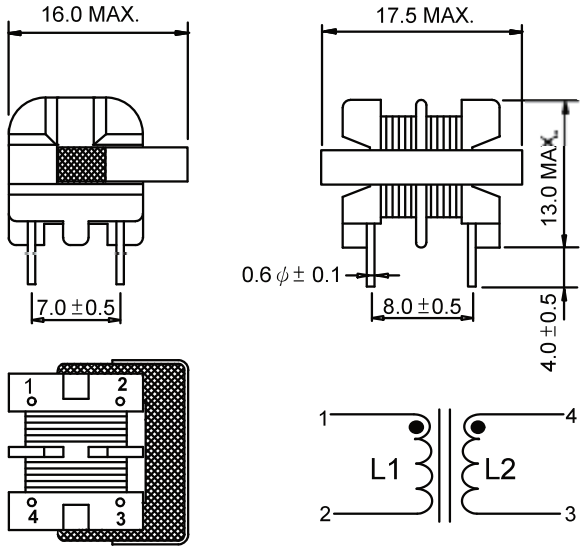


**CFU1001H SERIES**

1.Insulation resistance : 100M (Ohm) at 500 (Vdc)
2.Rated voltage : 100 to 270 V / 50-60Hz
3.Temperature rise : ≦40℃
4.Withstanding voltage : 1.5K Vac / 1minute
5.Test condition : 1KHz / 1 V
6.Operating temp. : -20℃ to +105℃
7. □ : H : Horizontal mounting type
V : Vertical mounting type

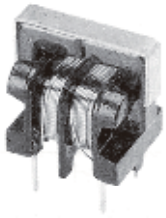

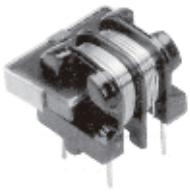

UNIT : mm

| PART NO. | Ind.(mH) MIN. | / L1 — L2 / (uH)MAX. | DCR (ohm) MAX. | Rated current (A) rms |
|---|---|---|---|---|
| CFU1001□-01 | 2 ×0.20 | 50 | 0.10 | 2.00 |
| CFU1001□-02 | 2 ×0.47 | 100 | 0.18 | 1.70 |
| CFU1001□-03 | 2 ×0.70 | 100 | 0.30 | 1.20 |
| CFU1001□-04 | 2 ×1.00 | 100 | 0.50 | 1.00 |
| CFU1001□-05 | 2 ×2.00 | 200 | 1.00 | 0.50 |
| CFU1001□-06 | 2 ×5.60 | 200 | 2.80 | 0.30 |
| CFU1001□-07 | 2 ×10.0 | 200 | 3.50 | 0.25 |
| CFU1001□-08 | 2 ×22.0 | 200 | 6.30 | 0.20 |
| CFU1001□-09 | 2 ×40.0 | 400 | 8.00 | 0.10 |

Unspecified values available on request.

# CFU1101 SERIES

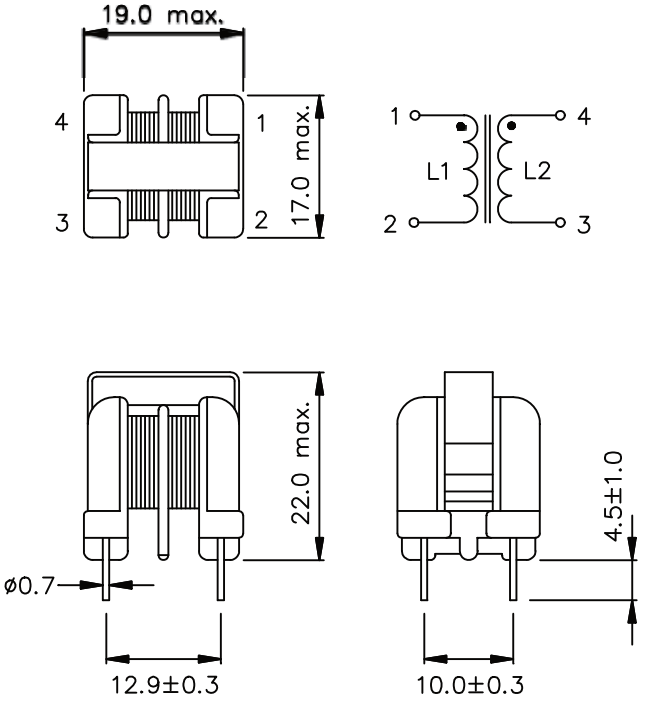


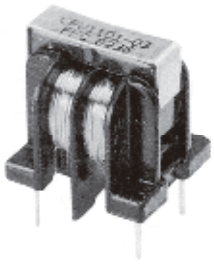

1. Insulation Resistance: 100M (Ohm) at 500 (Vdc)
2. Rated Voltage: 100 to 270 V/50–60 Hz
3. Temperature Rise:≦40˚C
4. Withstanding Voltage: 1.5Kvac/1 minute
5. Test Condition: 1KHz/1V
6. Operating Temp.: −20˚C to +105˚C

UNIT : mm

| Part No. | Ind. (mH) min. | /L1−L2/ (μH) max. | Rdc (ohm) mcx. | Rated current (A) rms |
|---|---|---|---|---|
| CFU1101−01 | 2X3 | 80 | 0.35 | 0.9 |
| CFU1101−02 | 2X1.5 | 80 | 0.15 | 1.0 |
| CFU1101−03 | 2X8 | 80 | 0.65 | 0.8 |
| CFU1101−04 | 2X8 | 80 | 1.2 | 0.7 |
| CFU1101−05 | 2X20 | 200 | 1.8 | 0.5 |
| CFU1101−06 | 2X1 | 80 | 0.1 | 2.9 |
| | | | | |

*unspecified values available on request.*

# CF1602 SERIES

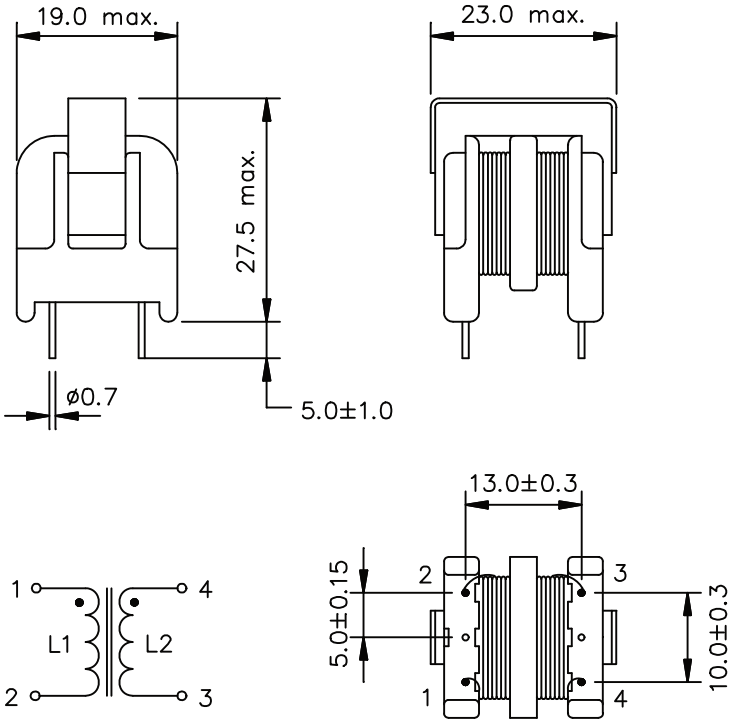


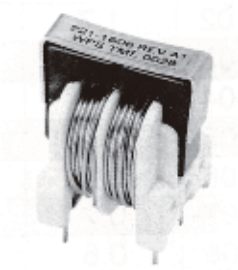

1. Insulation Resistance: 100M (Ohm) at 500 (Vdc)
2. Rated Voltage: 100 to 270 V/50–60 Hz
3. Temperature Rise:≦40˚C
4. Withstanding Voltage: 1.5Kvac/1 minute
5. Test Condition: 1KHz/1V
6. Operating Temp.: −20˚C to +105˚C

| Part No. | Ind. (mH) min. | /L1–L2/ (μH) max. | Rdc (ohm) max. | Rated current (A) rms |
|---|---|---|---|---|
| CFU1602–01 | 2X10 | 100 | 0.5 | 1.0 |
| CFU1602–02 | 2X8 | 75 | 0.4 | 1.2 |
| CFU1602–03 | 2X8 | 75 | 0.3 | 1.5 |
| CFU1602–04 | 2X25 | 200 | 1.2 | 0.5 |
| | | | | |
| | | | | |
| | | | | |

*unspecified values available on request.*