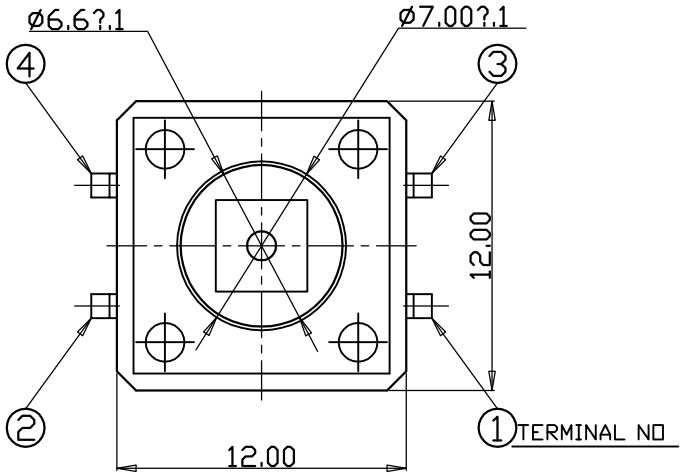

PCB DIMENSION

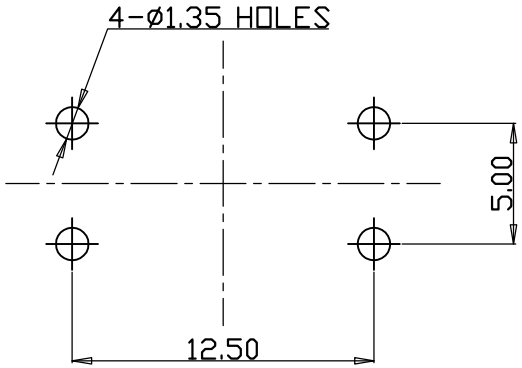

CIRCUIT DIAGRAM

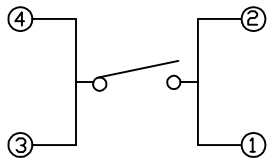

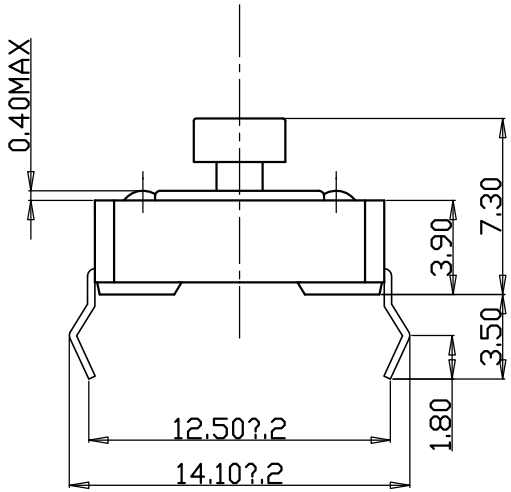

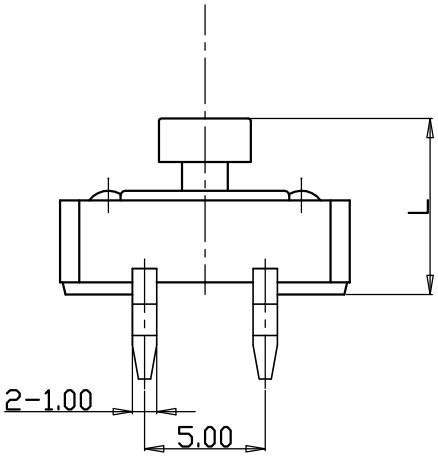

NOTE

1. RATING : DC 12V 50mA
2. OPERATING FORCE : 180±50gf
3. TRAVEL : $0.25^{+0.2}_{-0.1}$ m/m
4. CONTACT RESISTANCE : 100Ω MAX
5. MANUFACTURING SPECIFICATION WOULD BE ACCORDANCE WITH HT0102
5. L: 7.3mm

PART NO	PART NAME	Q'TY	MATERIAL	STANDARD	DISPOSITION	REMARKS
5						
4						
3						
2						
1						
NO	CORRECTION					

TRIGONOMETRY	UNIT	SCALE 3/1	TACT SWITCHES
APPD	CHKD yongwoon park	DSGD	
			MODEL INT-1103BT73A

INNOCENT ELECTRONICS CO.,LTD.