CREE LED Solution Provider

RoHS COMPLIANT ENERGY SAVING LED CREE LEDS INSIDE

SHORT DESCRIPTION

- Round MCPCB board with 50 mm dimension
- Designed for Cree Xlamp Hight-Power LEDs XP-C, XP-E, XP-E High-Efficiency, XP-G
- Independent connection for each Led, designed for separated R, G, B LEDs
- Compatible Lenses: appropriate lenses from Ledil: Tuija series

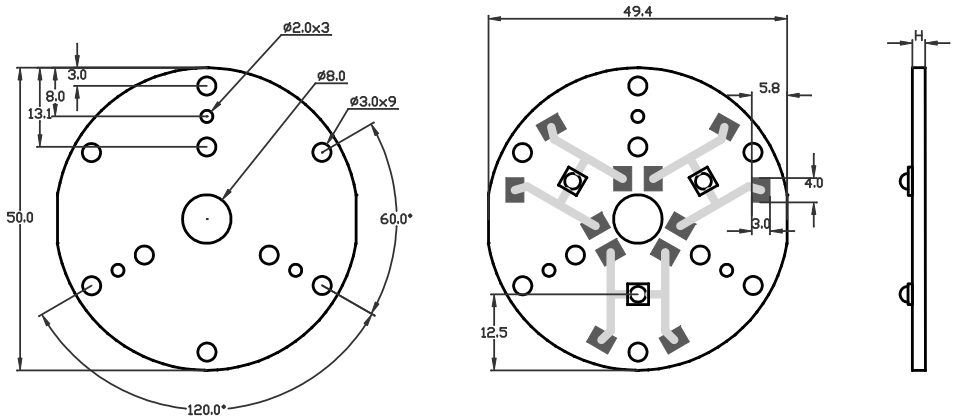

We reserve the right to make technical changes without prior notice.
Copyright ©NIVISS 19/10/2011 VA 00

PRODUCT NOMENCLATURE

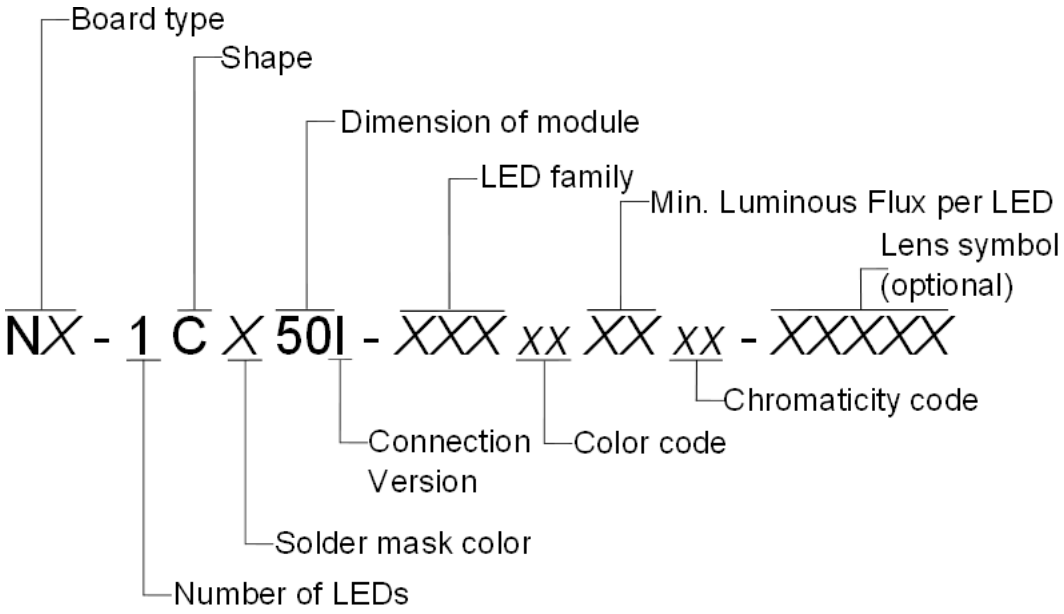

Board Type[1]

NX - 3CX50- XXXxxXXxx- XXXXX

	H [mm]	Material	Dielectric thermal conductivity [W/(m·K)]	Dielectric thickness [μm]
NV	2	1060 Alloy	1.5	80
NS	1.6			
NT	2	5052 Alloy	2	60
NC	1.6			
NM	2	Cu	3	60
NB	2	5052	depends on design[2] 10÷50	60

We reserve the right to make technical changes without prior notice.
Copyright ©NIVISS 19/10/2011 VA 00

Shape

NX- 3C X50I- XXXxxXXxx- XXXXX

	Shape name
R	Rectangular
C	Round
S	Star
P	Polygonal

Soldermask Color[3]

NX- 3CX 50I- XXXxxXXxx- XXXXX

	Color name
B	Black
O	Orange
W	White

Connection Version

NX- 3C50I - XXXxxXXxx- XXXXX

	Connection Type
I	Individual
S	Serial
P	Parallel

LED Family

NX- 3CX50- XXX xxXXxx- XXXXX

	Description	Suggested Board Type
XPC	Cree Xlamp XP-C Type	NV, NS, NT, NC, NM
XPE	Cree Xlamp XP-E Type	NV, NS, NT, NC, NM
XHE	Cree Xlamp High-Efficiency XP-E Type	NV, NS, NT, NC, NM
XPG	Cree Xlamp XP-G Type	NT, NC, NM

We reserve the right to make technical changes without prior notice.
Copyright ©NIVISS 19/10/2011 VA 00

Color

NX- 3CX50- XXXxx XXxx- XXXXX

		CTT Range [K]		
	Color name			Led families
		min	max	
WC	Cool White	5000	10000	XPC, XPE, XHE[4], XPG[5]
WO	Outdoor White	4000	5300	XPE, XHE[6], XPG
WN	Neutral White	3700	5000	XPC, XPE, XHE, XPG
80	80-CRI White	2600	4300	XPE, XHE, XPG
WW	Warm White	2600	3700	XPC, XPE, XHE, XPG
85	85-CRI White	2600	3200	XPE, XHE, XPG
90	90-CRI White	2600	3200	XPE, XHE, XPG

		Dominant Wavelength [nm]		
	Color name			Led families
		min	max	
BR	Royal Blue	450	465	XPC, XPE
BL	Blue	465	485	XPC, XPE
GR	Green	520	535	XPC, XPE
AM	Amber	585	595	XPC, XPE
RO	Red-Orange	610	620	XPC, XPE
RE	Red	620	630	XPC, XPE

Minimal Luminous Flux per LED

NX- 3CX50- XXXxxXX xx- XXXXX

Please refer to proper CREE Binning & Labeling documentation(located at http://www.cree.com/products/xlamp.asp) paragraph "Luminous or radiant flux group".

Lens Symbol (optional)[7]

NX- 3CX50- XXXxxXXxx- XXXXX

Following table contains some of example lenses for nGine.

Family	Example	Mounting	Manufacturer
Tuija	**11191, 11192, 11192**	Glue	LEDIL

We reserve the right to make technical changes without prior notice.
Copyright ©NIVISS 19/10/2011 VA 00

Ordering Code Example

NT-1CB50-XPEREGEBR-R2D4G3 – 2 mm 5052 Alloy board with black soldermask, 3 XP Red Green Blue (Royal Blue),

NT-1CB50-XPEREGEBR-R2D4G3-11191 – 2 mm 5052 Alloy board with black soldermask, 3 XP Red Green Blue (Royal Blue) with Ledil Tuija Lens.

ENVIROMENTAL CAUTION

It is prohibited to dispose of obsolete and waste electrical and electronic equipment together with regular household wastes. They should be properly sorted and recycled. old electrical and electronic equipment should be returned to a waste collection point established by a waste-management service. Waste electrical and electronic equipment can be broken down to base materials and then recycled. For more information regarding waste management please contact your local authorities waste-management service or the seller of electrical and electronic devices.

NOTES

[1]Another thickness available on request.
[2]Blind holes technology.
[3]Another soldermask color available on request.
[4]Max. CCT Range 8300 K.
[5]Max. CCT Range 8300 K.
[6]Min. CCT Range 2600 K.
[7]More lenses available on request.

We reserve the right to make technical changes without prior notice.
Copyright ©NIVISS 19/10/2011 VA 00